TROUBLE SHOOTING

Trouble	Checkpoint	Solution
Door stops during soft closing	Check if door bottom contacts thefloor or bottom track contacts the floor guide.	Verify that the track mounting screws are not loosened. Then, adjust the door height such that theclearance between the door bottom and floor is 10 mm (Ref. fo section 12 ❶).
	Check if the room where the trackinstalled is a closed chamber.	Install a ventilator to relieve the air.
	Check if the upper track or guiding track (top) are set horizontally.	Using a level gauge, reset the upper track and guiding track horizontally.
	Check if door touches the side wall.	Adjust the door depth position to backward (Ref. to section 12 ❸).
No soft closing	Check if trigger is installed.	Install trigger to correct position.
	Check if door is closed or opened by excessive force.	Do not close or open the door by excessive force as it may damage the soft closer.
	The position of the trigger catcher may become dislocated. (It is hidden as installed in upper track.)	Remove the door and the upper track, then check the status of the trigger catcher in section 4 .
Abnormal noise during operation	Check if door bottom contacts the floor or bottom track contacts the floor guide.	Verify that the track mounting screws are not loosened. Then, adjust the door height such that the clearance between the door bottom and floor is 10 mm (Ref. to section 12 ❶).
	Check track rollers for aluminum dust.	Remove the track, then pull out and clean the rollers and track.
	Check if door is warped.	If the door is warped, Replace the door.
	Check if door touches the side wall.	Adjust the door depth position to backward (Ref. to section 12 ❸).
	Check if the fastening screws are loosened.	Fasten the screws.
	Check the tracks if there's any gap or unevenness at the jointed parts.	Re-mount the tracks not to leave any gap nor unevenness at the jointed parts.
Heavy door operation	Check if door bottom contacts the floor or bottom track contacts the floor guide.	Verify that the track mounting screws are no loosened. Then, adjust the door height such taht the clearance between the door bottom and floor is 10mm (Ref. to section 12 ❶).
	Check if door is warped.	If the door is warped, Replace the door.
	Check if door touches the side wall.	Adjust the door depth position to backward (Ref. to section 12 ❸).
Door does not move	Check if the fastening screws are loosened.	Fasten the screws.
Door starts to move	Check if the upper track is set horizontally.	Using a level gauge, reset the upper track horizontally.
Door stops or is caught during operation	Check the tracks if there's any gap or unevenness at the jointed parts.	Re-mount the tracks not to leave any gap nor unevenness at the jointed parts.
Door cannot be opened fully	Are there any obstacles in contact with the guiding track (bottom)?	Remove the obstacles.

runners SLIDING SYSTEMS

FlushSlide Pro Softclose

Installations Instructions

FLUSH SLIDING DOOR SYSTEM With two-way Damper

Thank you for using our product. Before installation,
please read this manual thoroughly to ensure correct installation.
Please keep this manual at hand for future reference.

ABOUT THE PRODUCT

- **The Product is a coplanar sliding door system.**
- **Built in soft closer, enables two-way soft closing movement in both direction.**

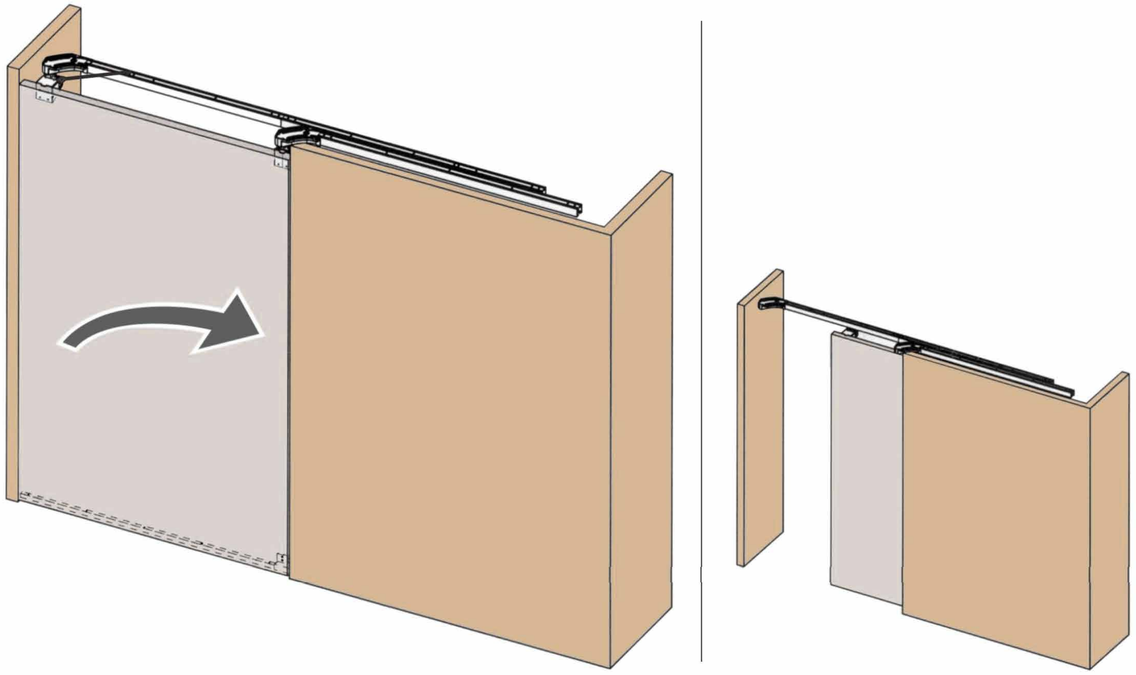

SPECIFICATION

Item name		BS02
Door height		2700mm below
Door width		500~1500mm
Door thickness		30~55mm
Door weight		20-80kg
Adjustment range	Vertical	±4mm
	Front/Back	±4mm

- The recommended temperature range for use is 5℃ to 40℃.
- The closing speed of the soft closing type door may change depending on the ambient temperature, operating method or installation quality.

FOR YOUR SAFETY AND PROPER INSTALLATION

Meaning of symbols

Warning Caution	Prohibited	Required

Warning: May result in serious injury if not followed properly.

- This product should be installed by a qualified person in accordance with this manual. If it is not installed correctly, the door may fall and cause injury.
- Provide a frame that can withstand the weight and impact of opening and closing the door. Be sure to use the specified screws and tighten them securely. If the mounting strength is insufficient, the door may fall and cause injury.
- Do not use this product for any other purpose,or with doors that are outside the specifications of this manual.
- Do not disassemble or modify any parts other than those described in this document.

Caution: May result in injury or damage if not followed properly.

- This product is a part for architecture fittings. After installation, please check the function and safety of the final product. Please inform the end user how to use product safely.
- Follow the specified dimensions, specifications, and alignment of the door and frame. Warping, tilting or twisting of the frame or door may cause failure.
- If cutting any parts, make sure to remove any burrs before installation. Also check the upper tack for any left-over burrs or scraps and remove these.
- Make sure to check the screws for slack at regular intervals (one month from first usage, half a year, and then one time every years in recommended).
- We recommend that two or more people install this product to reduce the rist of damaging components.

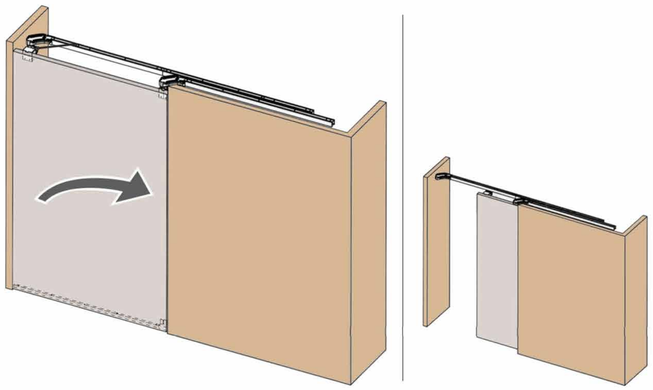

Model Right

Model Left

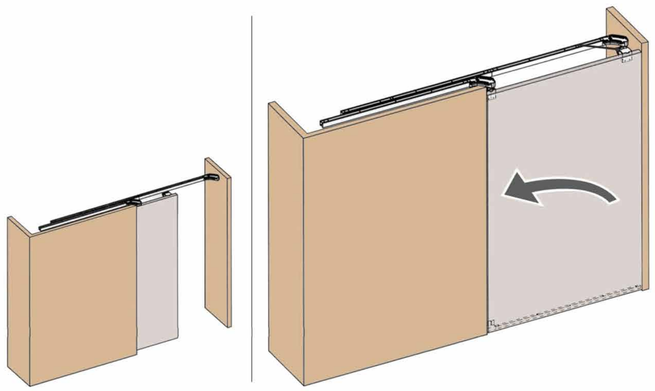

PARTS LIST

Left opening is shown in the parts list and the installation drawing.

Set name	Item name
Bracket set Left to Right opening	BS02
Bracket set Right to Left opening	BS02

As for right opening, ① and ② will be mirror image.

① Guiding track (top)	② Guiding track (bottom)	③ Bracket (for leading edge)	④ Bracket (for trailing edge)	⑤ Bottom guide
x2	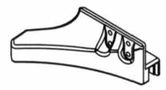 x1	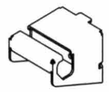 x1	x1	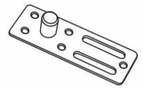 x1
⑥ Connecting plate	⑦ Door stopper (floor)	⑧ Bumper block	⑨ Trigger	⑩ Caution sticker
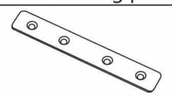 x1	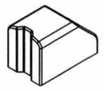 x1	x1	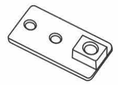 x2	x1

⑪ Bind head tapping screw 5x40	⑫ Countersunk head tapping screw 4x30
For ① x10	For ⑥ x30

Set name	Item name
Closer set 40kg	BS02
Closer set 70kg	BS02

⑬ Buffer device	⑭ Door roller (trailing edge)
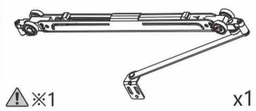 ⚠※1 x1	⚠※1 x2

※1 Do not remove the tape on the product.

Set name	Item name
Rail set	BS02

⑮ Upper track A	⑯ Upper track B	⑰ Bottom track
1500mm 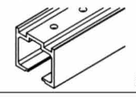 x2	700mm 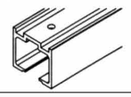 x1	1500mm 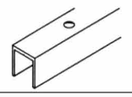 x1

■ Tools needed

Hexagon

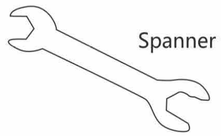

Spanner wrench

■ Cover panel

Cover panel	Height	Width	Thickness
Front cover panel	60	Opening width	Max. 13
Rear cover panel	60	Free	Free

Installation drawing

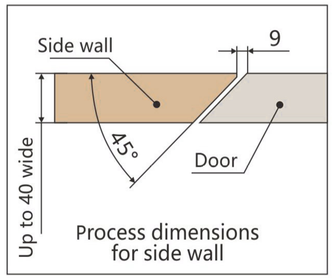

Set:The width of the door opening is Y
The inner width dimension of the door frame is: W=Y * 2+174
The door width is: A=Y-6 (the gap on both sides of the door is 3+3)
Fixed door or wall: D=A+180

Track length L1=door opening width Y+608
Track length L2=door opening width Y+20
Door opening height H=upper seam 65+lower seam 10+total door height
Door thickness S=Door thickness+165

Attention: The maximum thickness of a fixed door panel or wall is 10 mm thicker than a movable door panel.
If the thickness exceeds this, the door cannot be opened or closed.
For example, if the maximum thickness of the movable door panel is 55mm, the fixed door panel or wall limit is less than 65mm.

Set the distance between L1 and L2 end faces to K (fix X position first and then K, note that K=X)

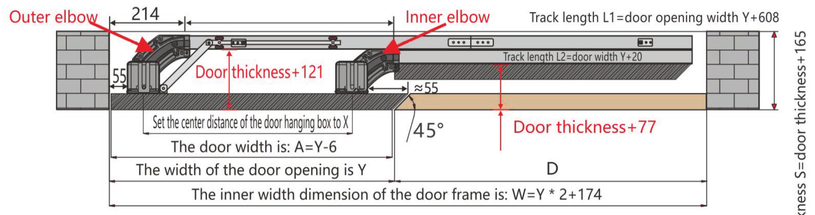

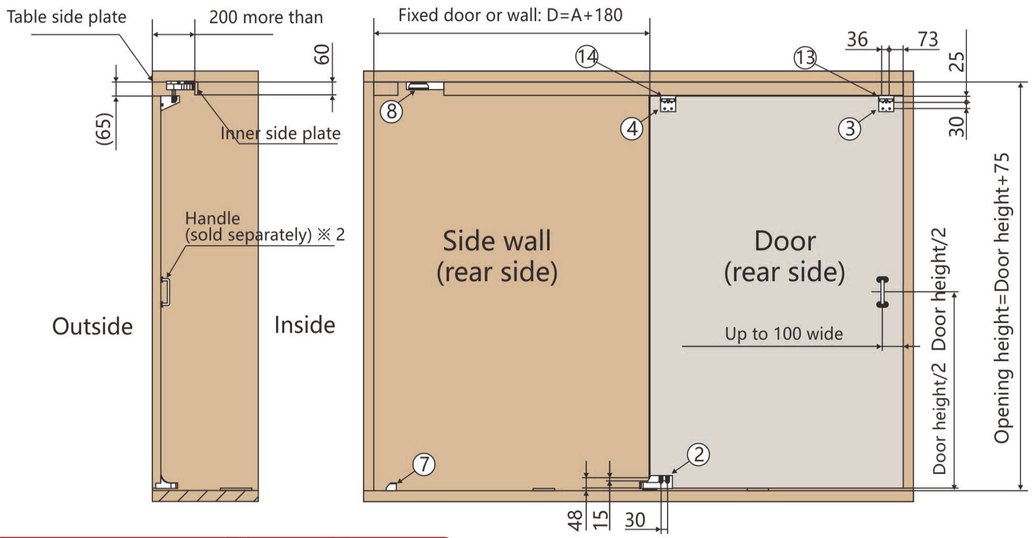

Door process dimensions

Thebelowdrawingshowsthelefttorightopeningtype.

Units: mm

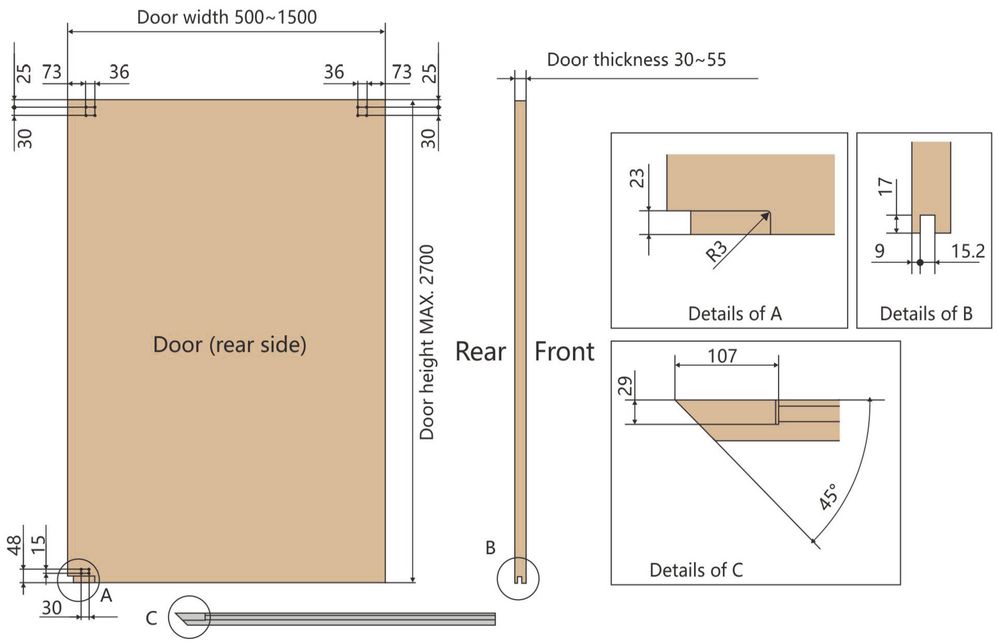

1 Track length

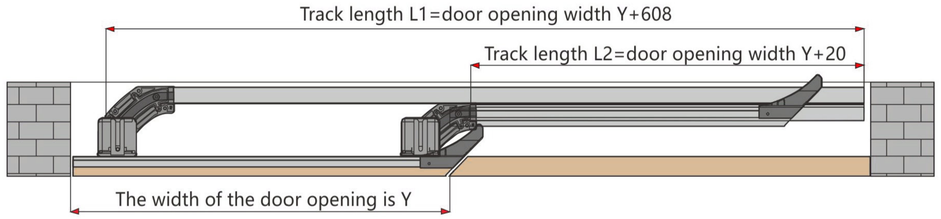

2 Remove the tail plug

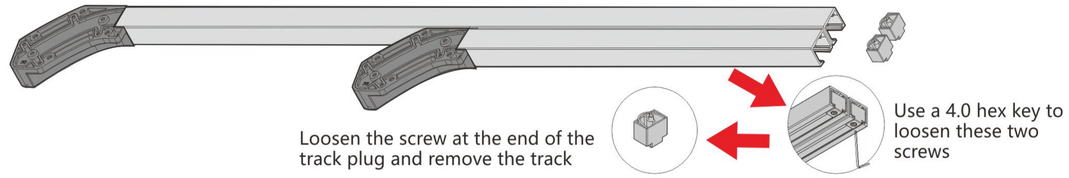

3 Install the buffer accessories into the track in order

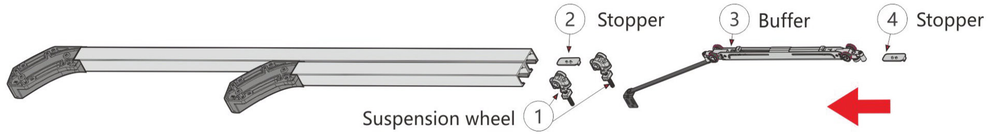

4 Mounting parts on the door

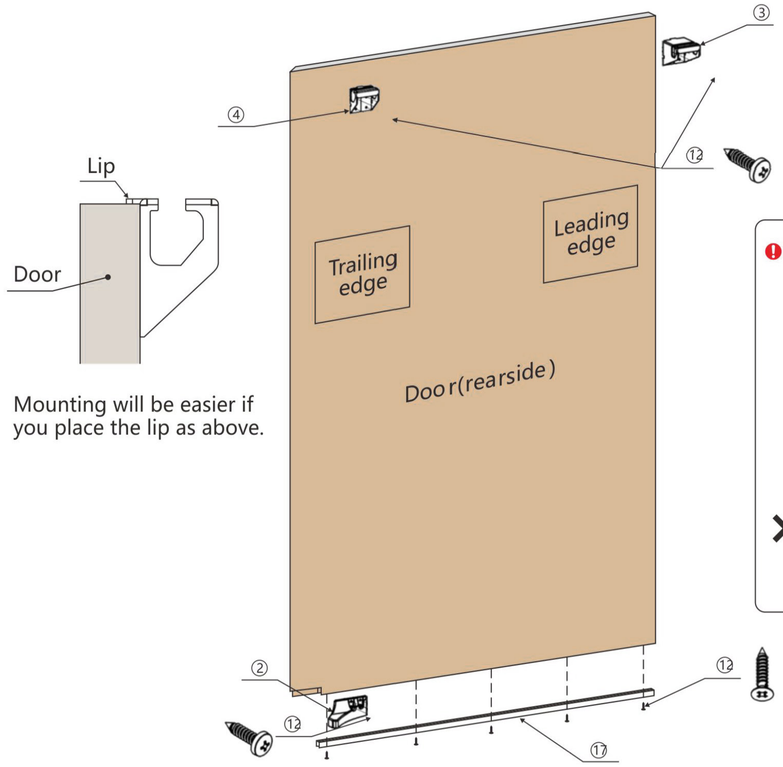

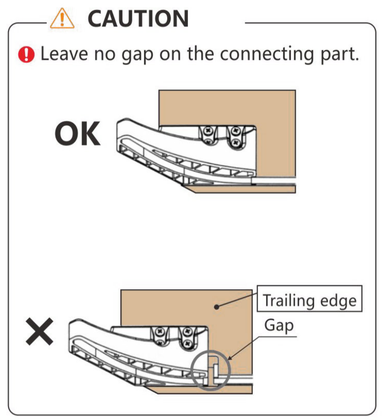

5 Adjusting the position of the gear

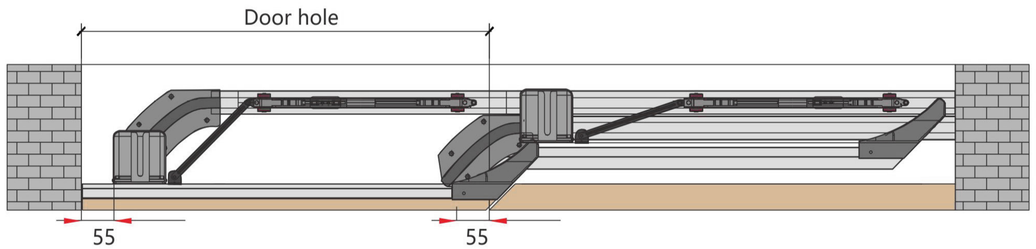

6 Mounting of Upper Track A

■ ⑮ Upper track A (leading edge)

❶

⚠ CAUTION

- Remove any dirt or aluminum chips from the track.

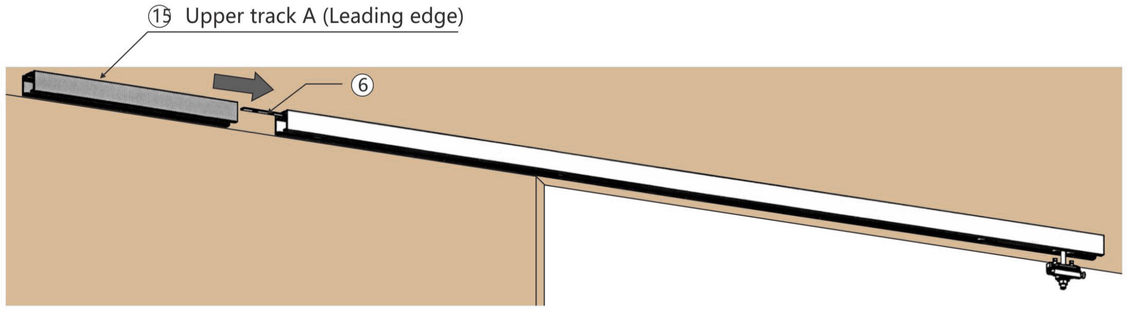

❷

⚠ CAUTION

- Keep holding the track until screwing is finished.
- Be careful not to misalign the tracks.
  Tighten the screws firmly to leave no gap.

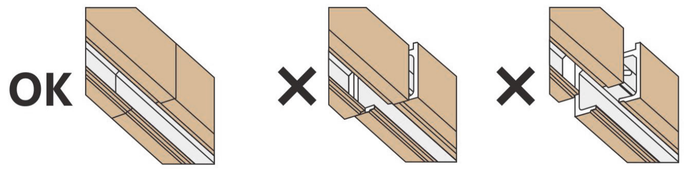

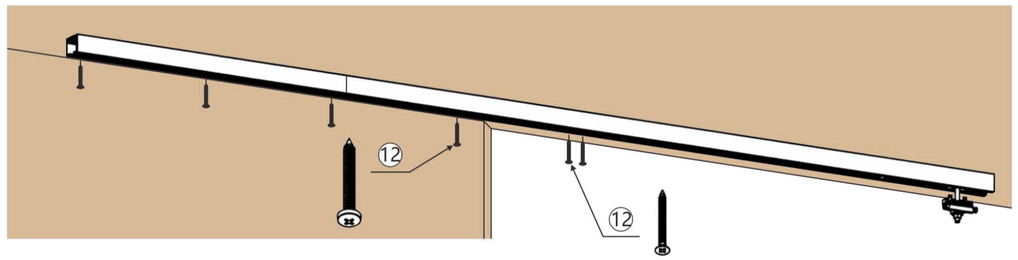

■ ⑮ Upper track A (trailing edge)

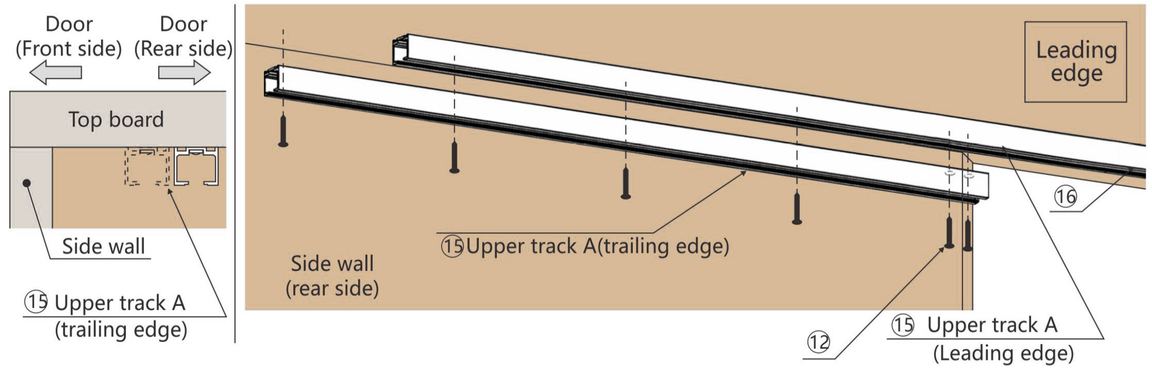

7 Mounting of Guiding Track (top)

❶

⚠ CAUTION

- Be careful not to misalign the tracks.
  Tighten the screws firmly to leave no gap.

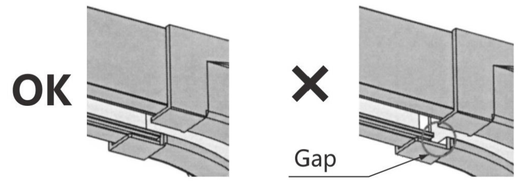

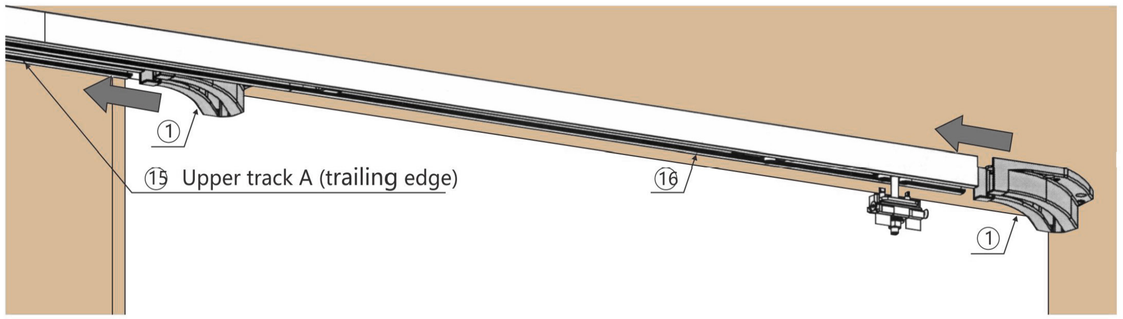

❷

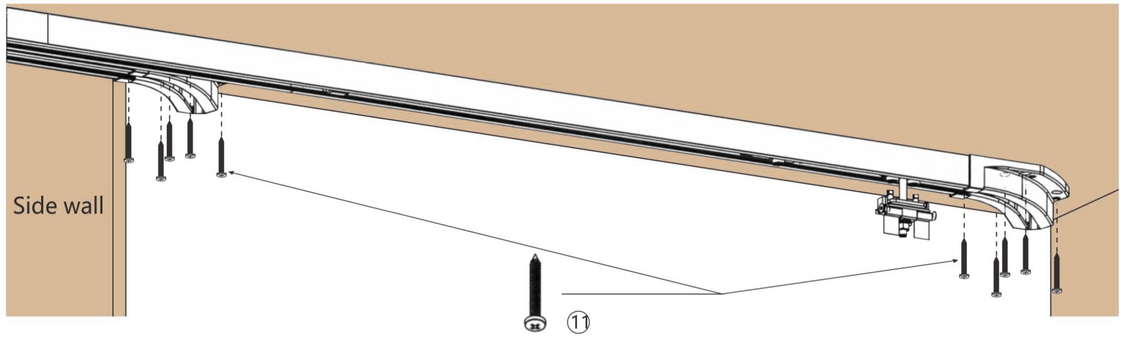

8 Inserting Upper Roller into the Upper Track A (trailing edge)

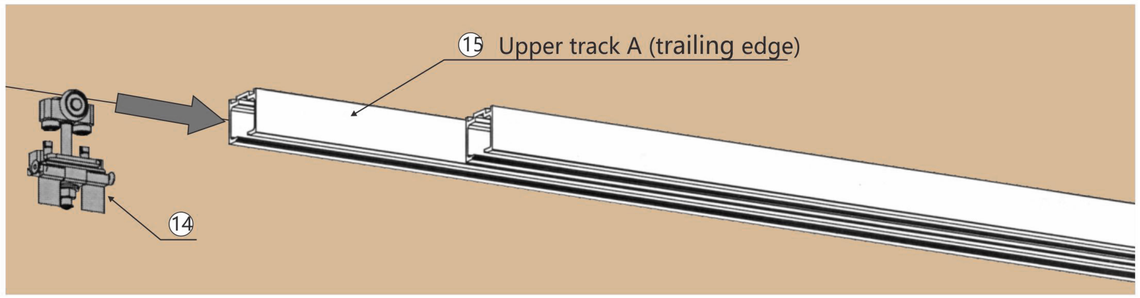

9 Mounting of the Bottom Guide

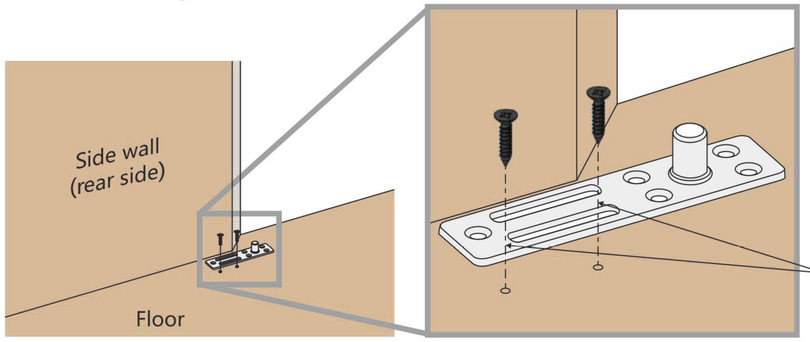

CAUTION

Do not fix the round holes at this stage.

10 Hanging Door

1. Put the door on the support, then place the groove of the bottom track on the protruding part of the floor guide.

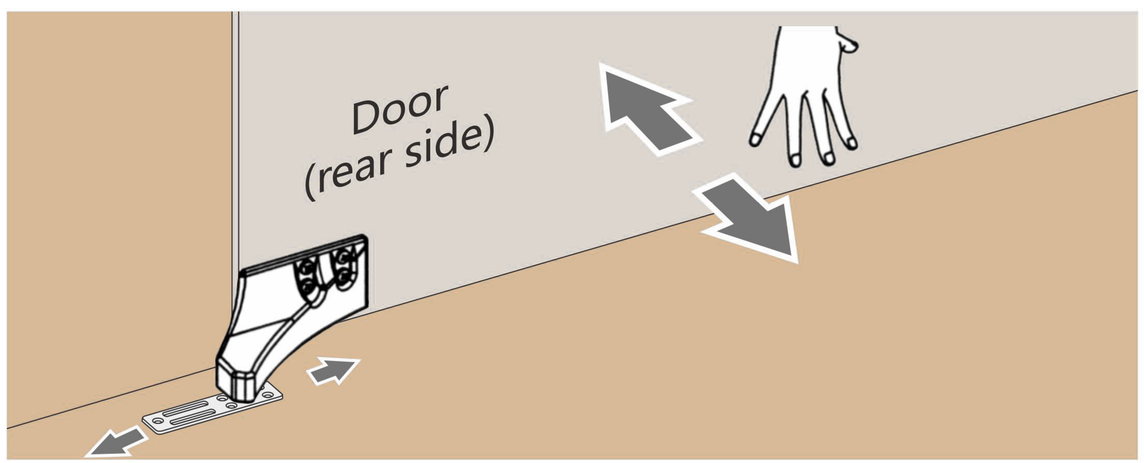

2. Slide the Soft Closer (leading edge) into the Bracket (leading edge)

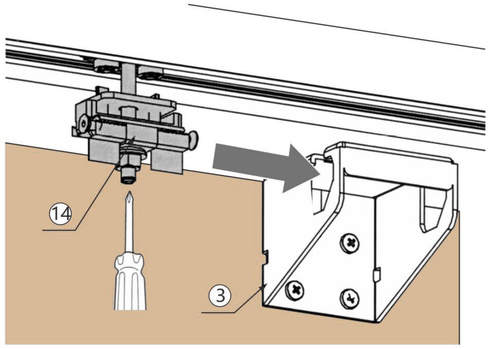

Slide the Soft Closer (trailing edge) into the Bracket (trailing edge)

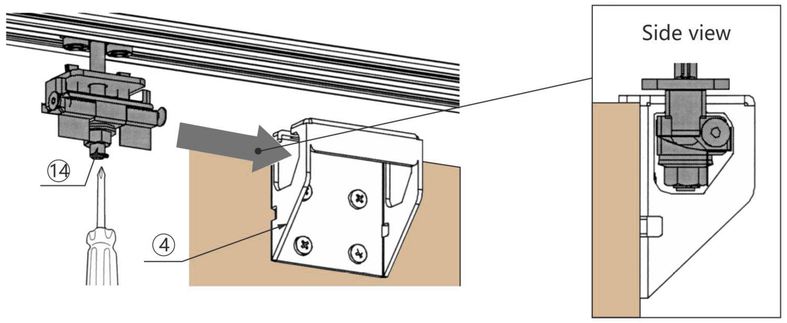

3. Hanging

The figures show the procedure for the leading edge⑭. The procedure for the trailing edge ⑭ will be the same.

(1) Remove the tapes.

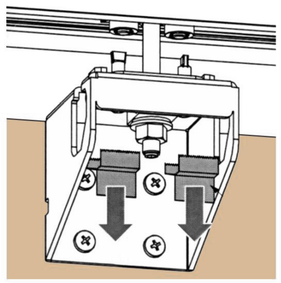

(2) Loosen the fastening nut for 360°。

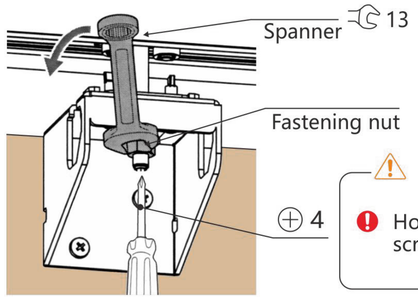

CAUTION

Hold the vertical adjustment screw with allen key.

(3) Turn the screw to raise the door from the support.

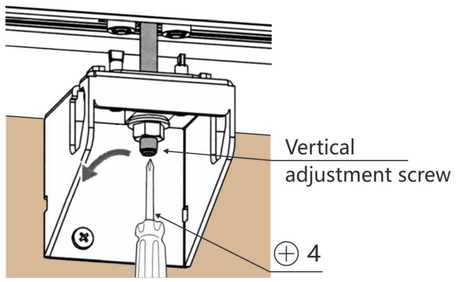

(4) Tighten the fastening nut

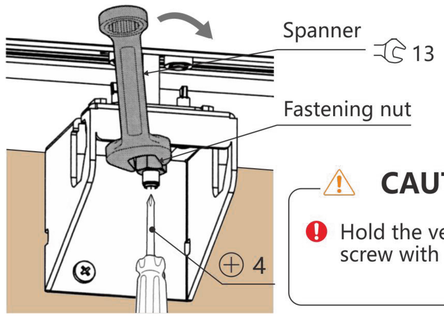

CAUTION

Hold the vertical adjustment screw with allen key.

(5) Tighten the fastening bolt

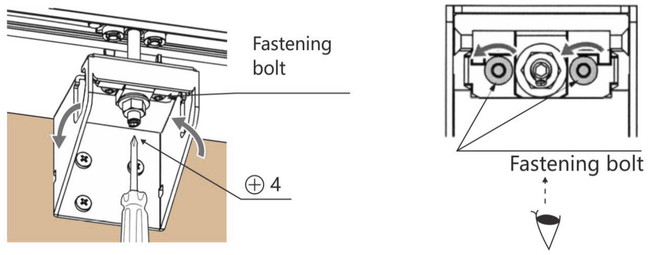

11 Door Adjustments

⚠ CAUTION

- Move door slowly so as not to go out of tune.
- Be sure to make adjustments in the orders of following procedure.
- We recommend that the adjustment be made by two people, since the door position needs to be checked from outside.

■ Adjustment range and operation

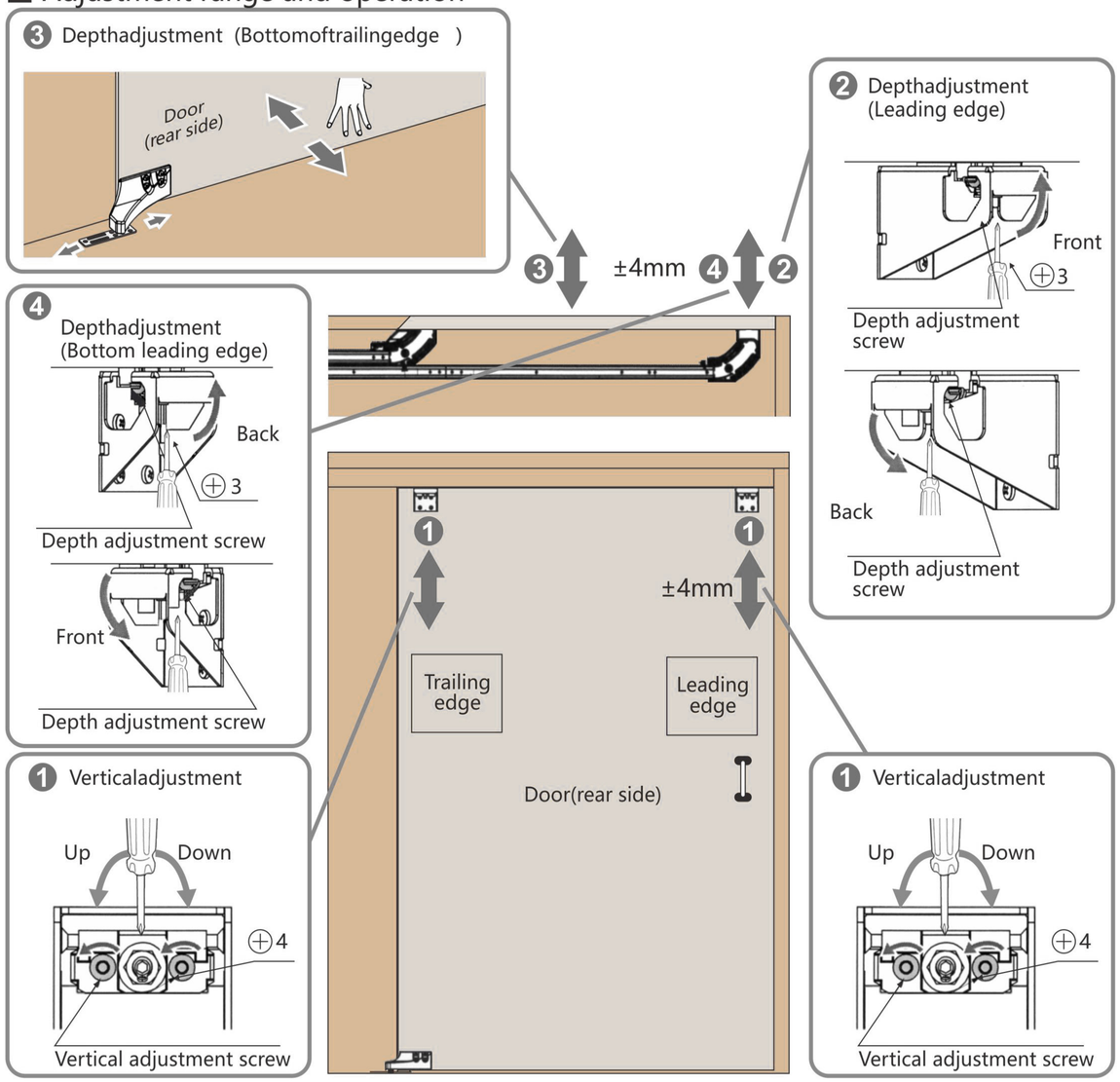

■ Preparations for adjustments

Thebelowfigurеsshowthebracketfortheleadingedge
The procedure for the trailing edge will be the same.

(1) Loosenthefasteningnutfor360 °.

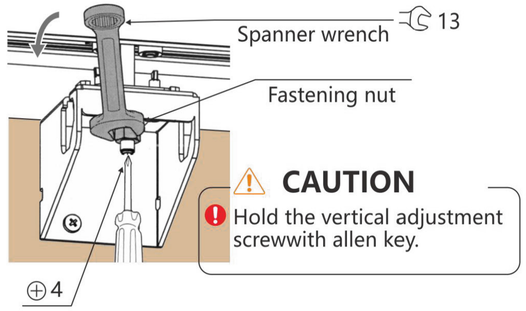

⚠ CAUTION

- Hold the vertical adjustment screwwith allen key.

(2) Loosenthefasteningboltsfor360°.

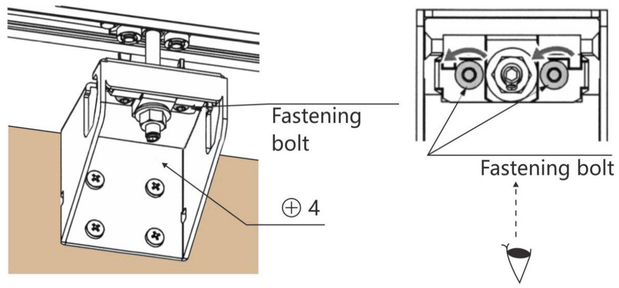

■ Adjustments procedure

1 Vertical adjustment

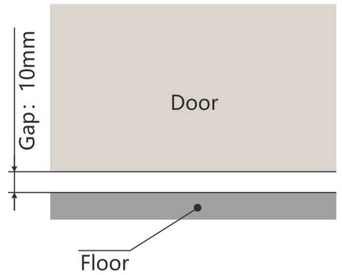

⚠ CAUTION

- The top end and the bottom end of the door should reach the vertical frame in the same time.

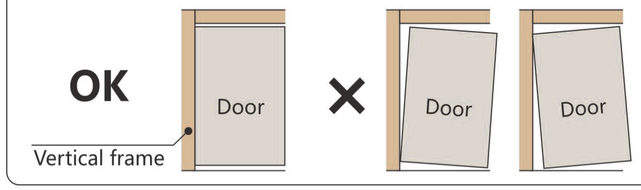

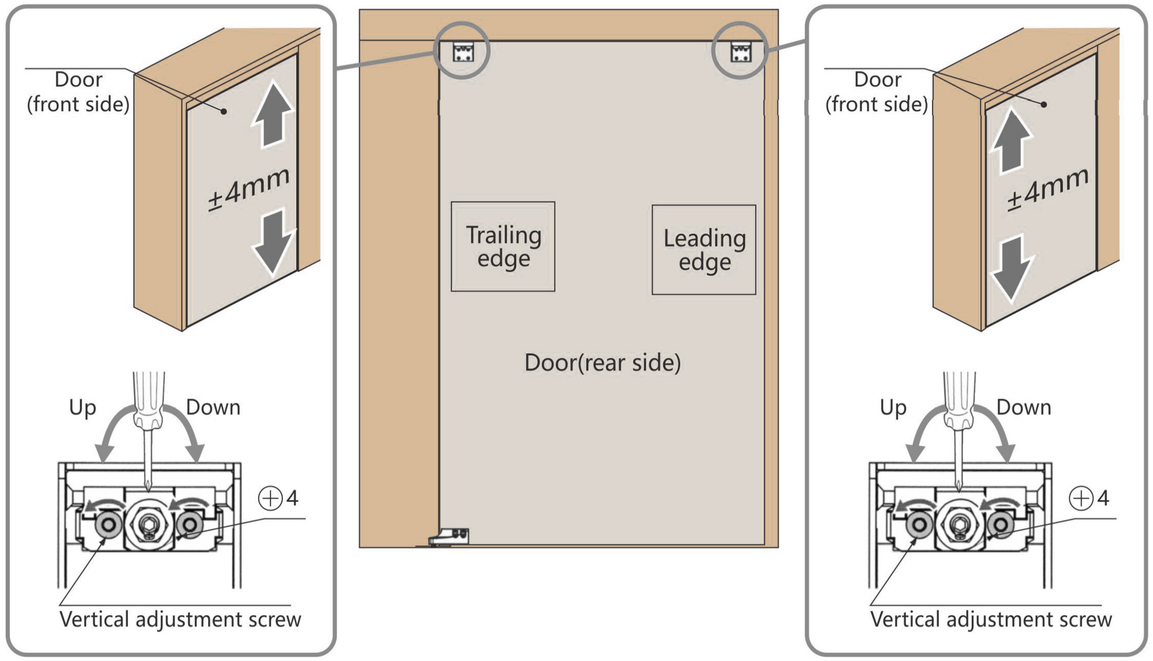

❷ Depth djustment (Top of leading edge)

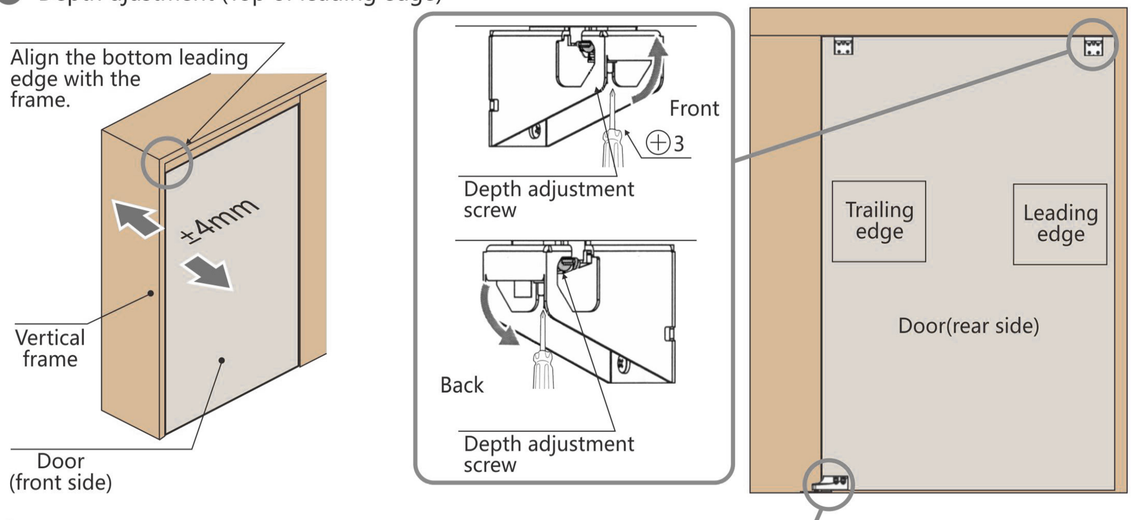

❸ Depth djustment (Bottom of trailing edge)

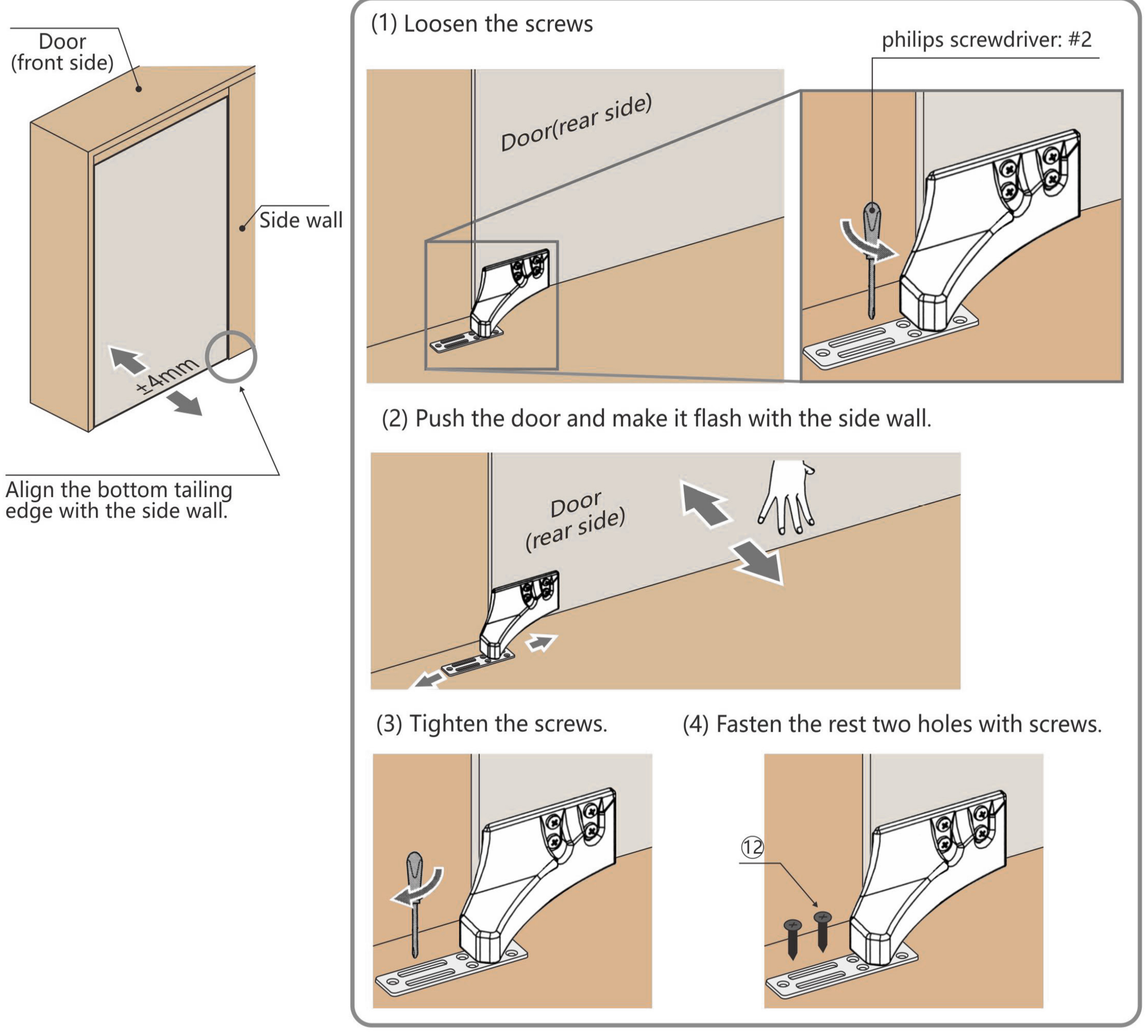

❹ Depth djustment (Bottom of leading edge)

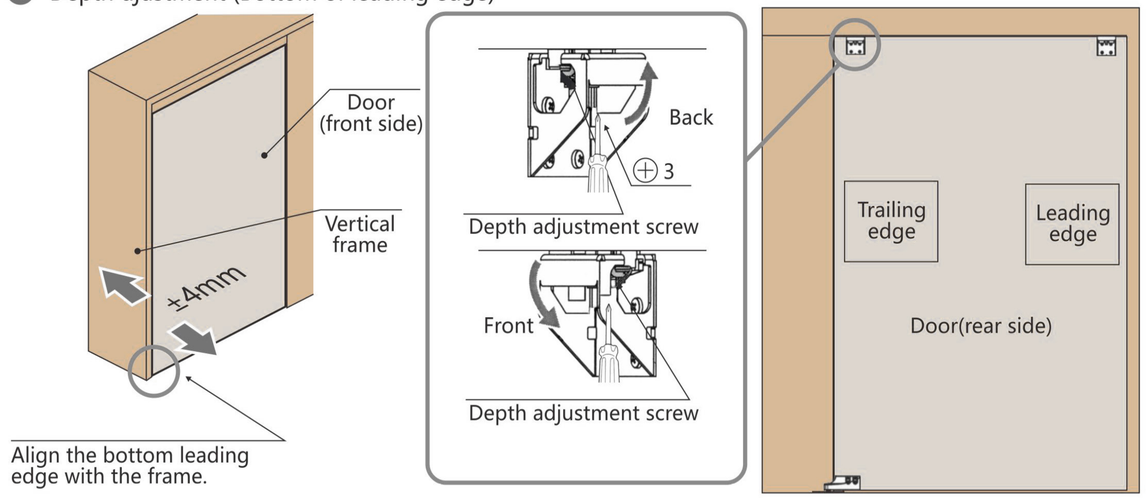

※4 If the adjustment cannot be done completely, check if the door is warped, or check the parts mounting positions are correct.

❺ Tighten the fastening nut after the adjustment.

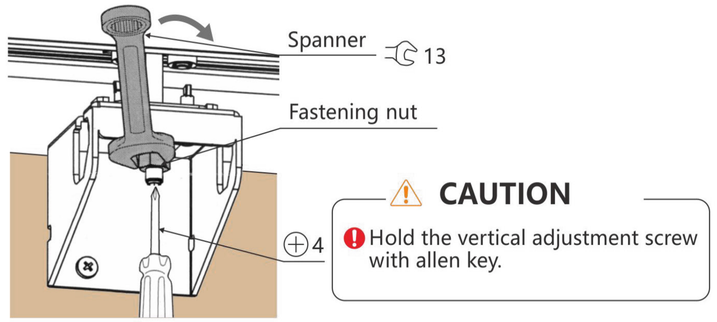

❻ Tigthen the fastening bolts.

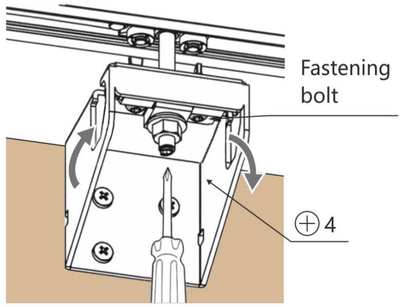

❼ Press the heads of Depth adjustment screws to the bracket③④.

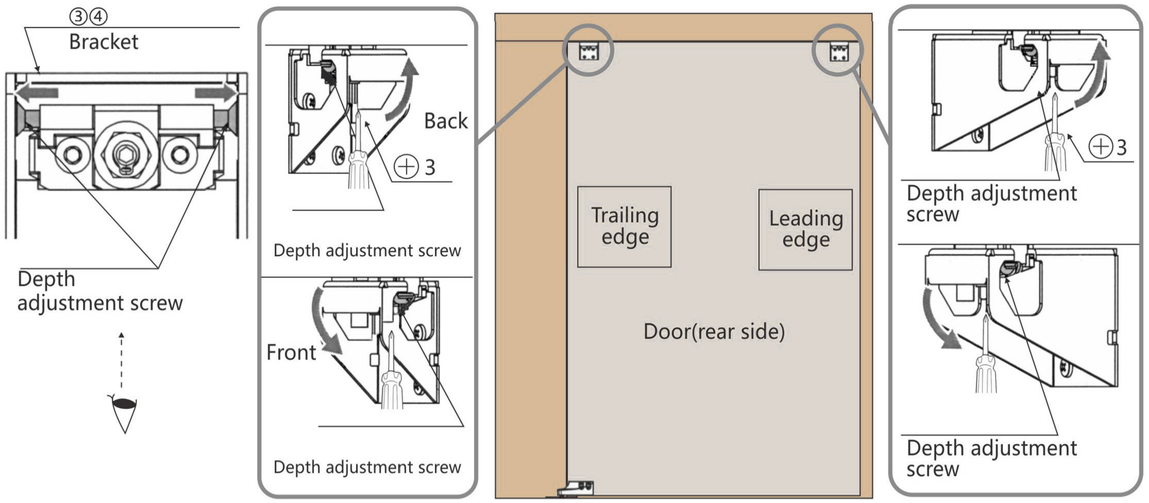

❽ Checkthedoormovement, thencheckiftheresanýscreworuntloosened.

12 Mounting of Door Stopper (Floor)

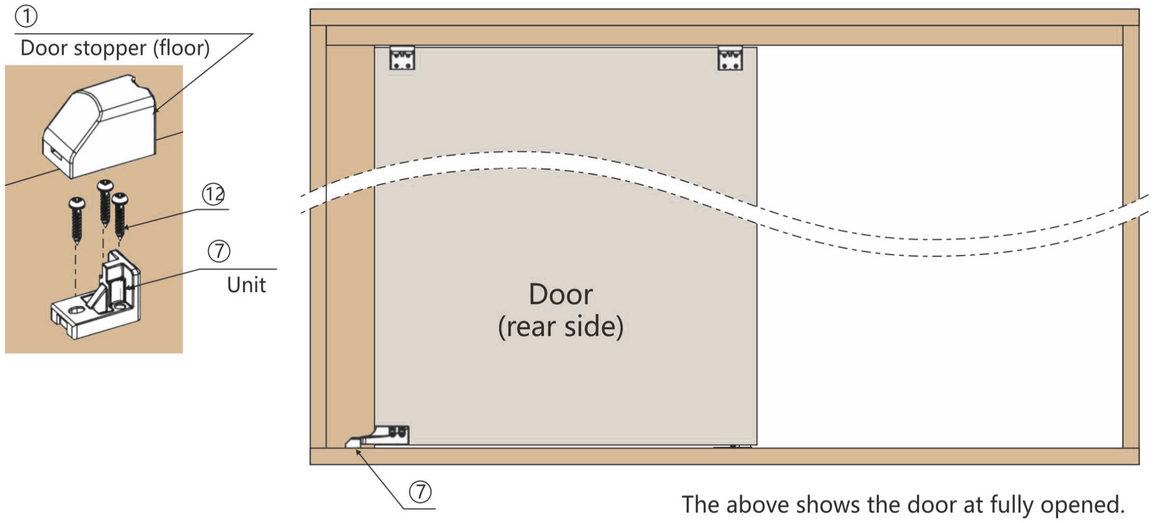

The above shows the door at fully opened.

13 Fastening of Bumper Block

1. Loosen the screw, then insert the bumper block into the upper track A (trailing edge)
2. Slide the bumper block until it touches the door roller.
3. Fasten the screw

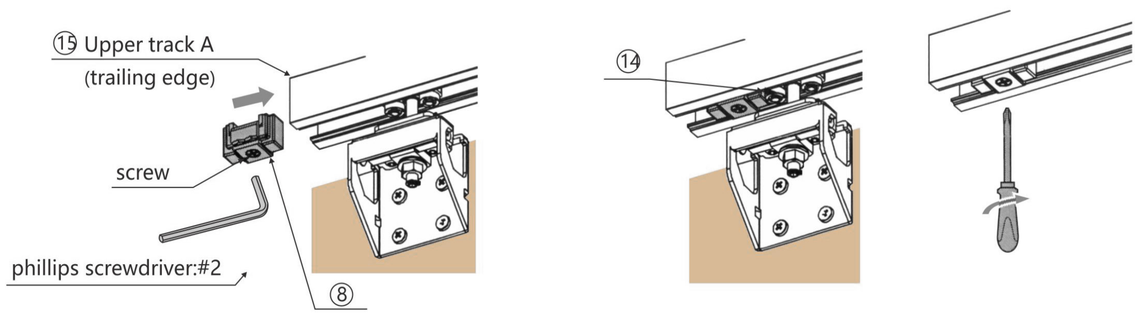

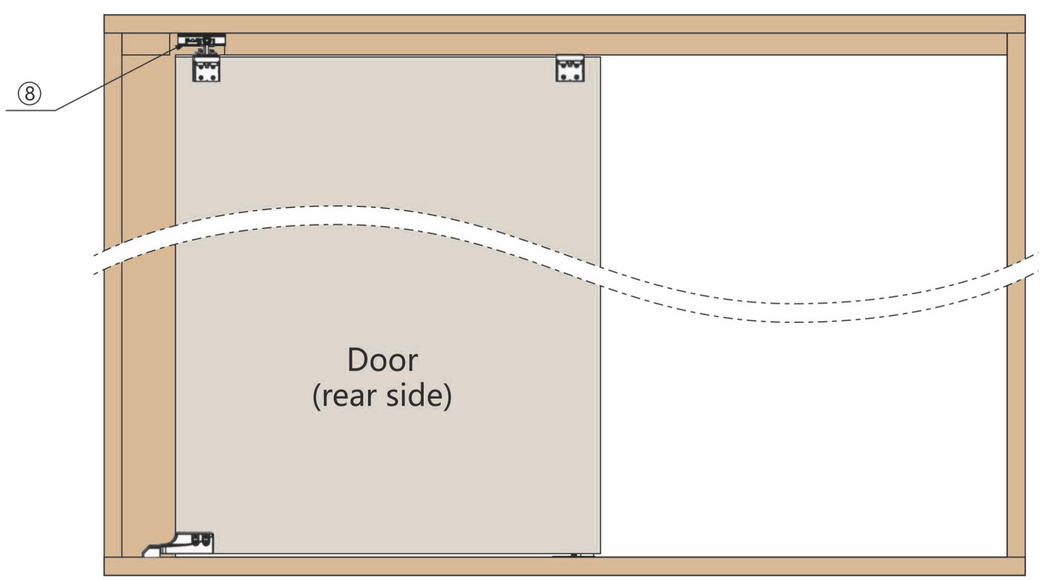

The above shows the door at fully opened.

14 Pasting the Caution Sticker

Paste the caution sticker to a prominent place on the door.

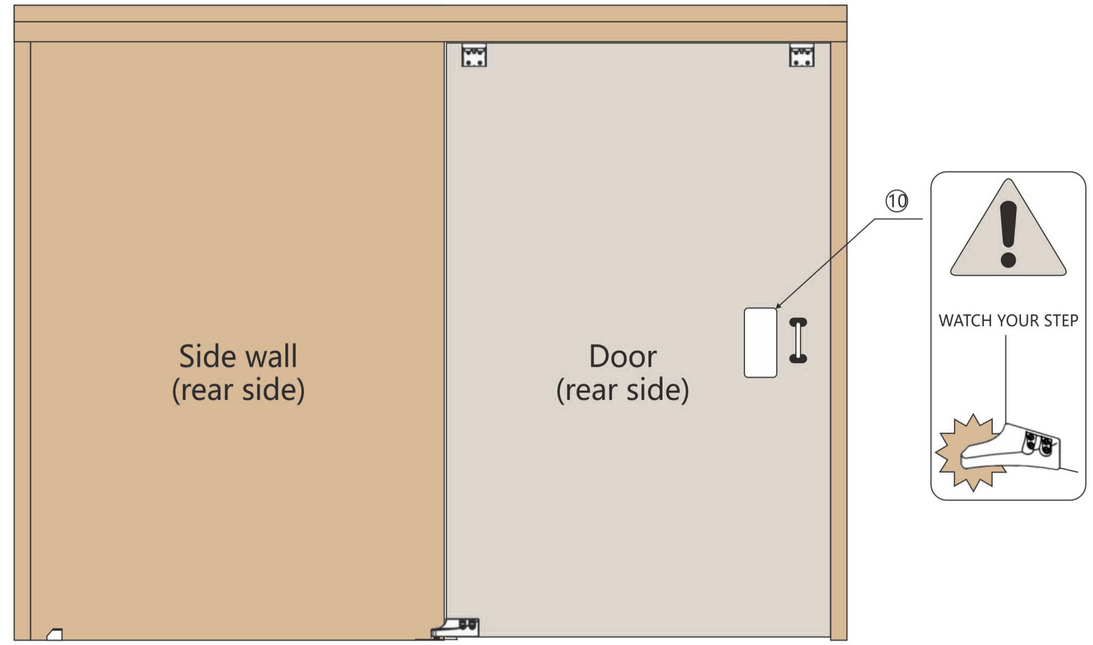

Final verification	Verify that all screws are securely tightened, and verify that all screws have been used.

PERIODICAL INSPECTION	· Clean inside of track. · Check upper and lower gaps between the door and frame. If necessary, adjust the gaps.